PESSOTTO®

Advanced Technology for Beds

Technical sheet for hideaway bed
Dynamic vertical single (102/122x200)

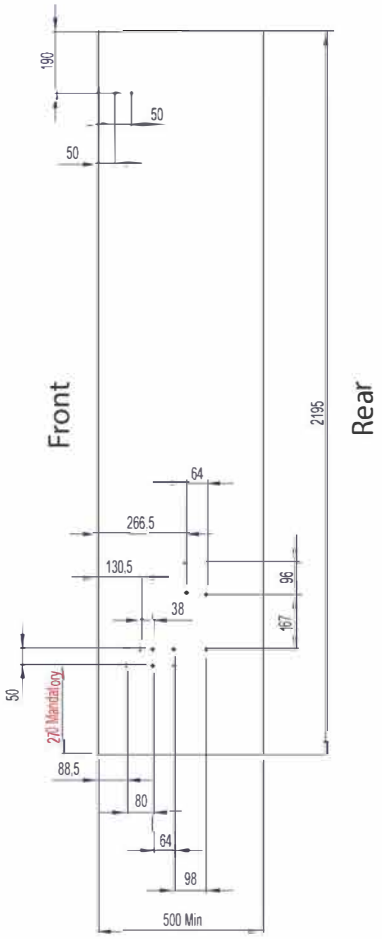

Drills for bushings M6

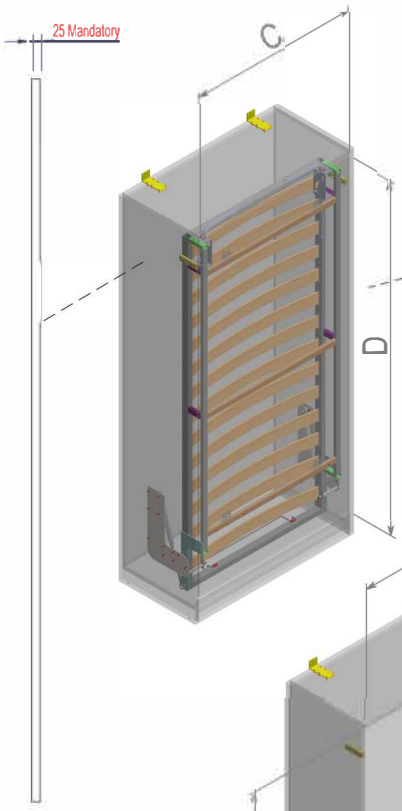

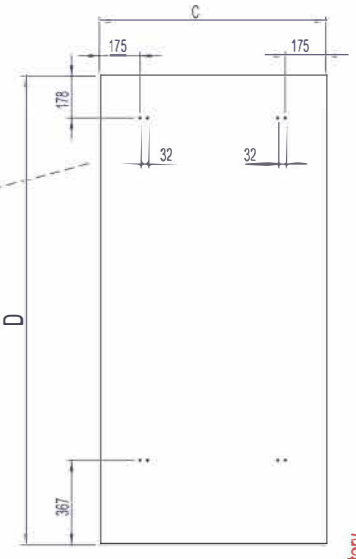

Drills for bushings M6

18 Mandatory

Optional

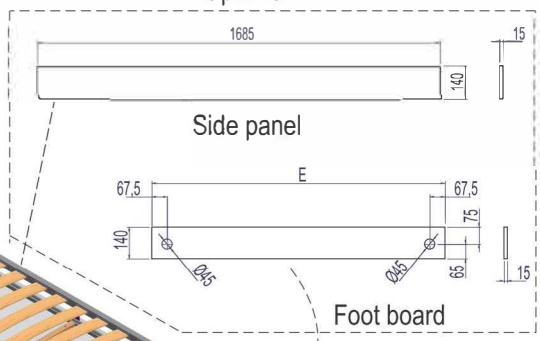

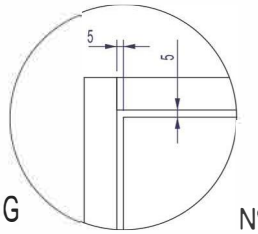

N°4 adjustable base for flatten.

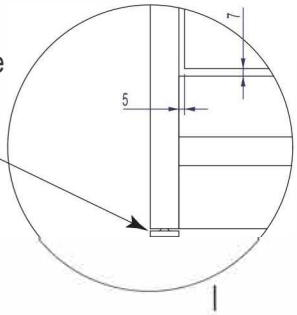

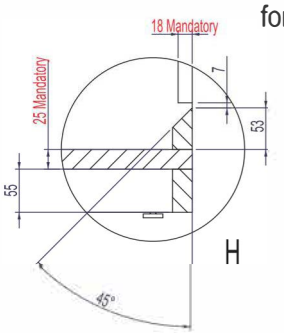

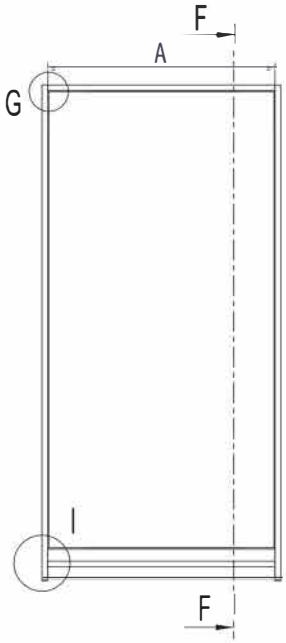

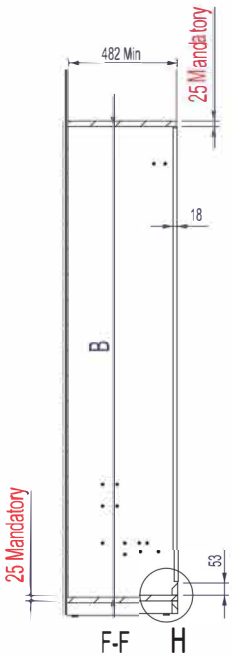

Bed spring size (mm)	Element internal size A x B (mm)	C (mm)	D (mm)	E (mm)
920x2000	1006x2090	996	2025	920
1220x2000	1306x2090	1296	2025	1220

11/06/2018

MADE IN ITALY

Pessotto Reti srl
Viale delle Industrie, 36 - Albina di Gaiarine (TV) - Italia
Tel. +39 0434 758734 - Fax +39 0434 758533
info@pessottoreti.com - www.pessottoreti.com